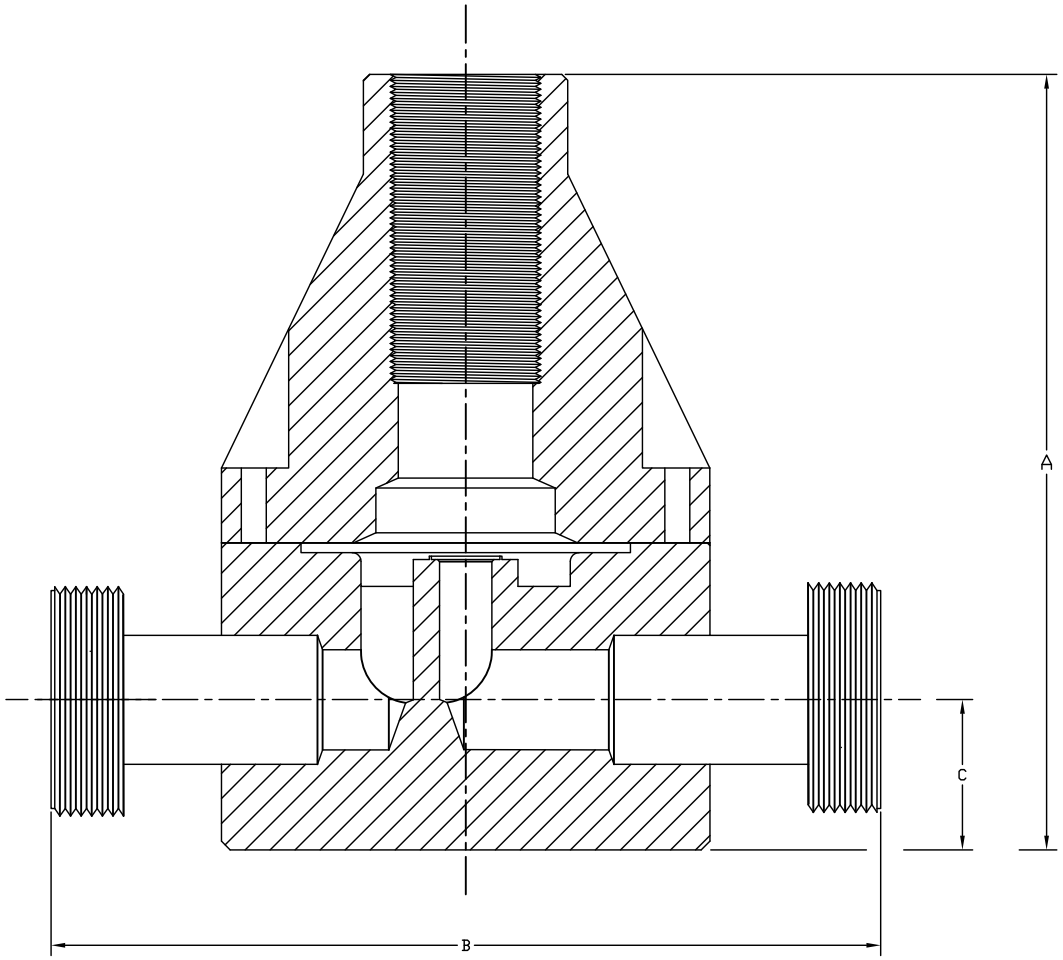

DIMENSIONS: BPMU-SERIES

All Materials

Size	A (in)	B (in)	C (in)
1/2"	4.250	4.850	1.080

NOTES: DIMENSIONS APPLY TO PVC & CPVC

GRIFFCO VALVE INC.
6010 NORTH BAILEY AVENUE
SUITE 1B
AMHERST, NY 14226
(716) 835-0891 FAX (716) 835-0893
www.griffcovalve.com

REVISIONS

REV	ZONE	DESCRIPTION	DATE	APPVD
–	–	–	–	

DESCRIPTION
DIMENSIONS – BPMU–SERIES VALVE 1/2"

DRAWN BY		SCALE	DATE
JCB		1X	7/12/2010
CHECKED BY	DATE	DRAWING NUMBER	REV
–	–	BPMUDIM08–08	1
APPROVED BY	DATE	SHEET 1 OF 1	
–	–		

PROPRITARY AND CONFIDENTIAL

THE INFORMATION CONTAINED IN THIS DRAWING IS THE SOLE PROPERTY OF GRIFFCO VALVE INC. ANY REPRODUCTION IN WHOLE OR IN PART WITHOUT THE WRITTEN PERMISSION OF GRIFFCO VALVE INC. IS PROHIBITED.